REV	DESCRIPTION	DATE	BY
A	FIRST ISSUE		

DWG NO.

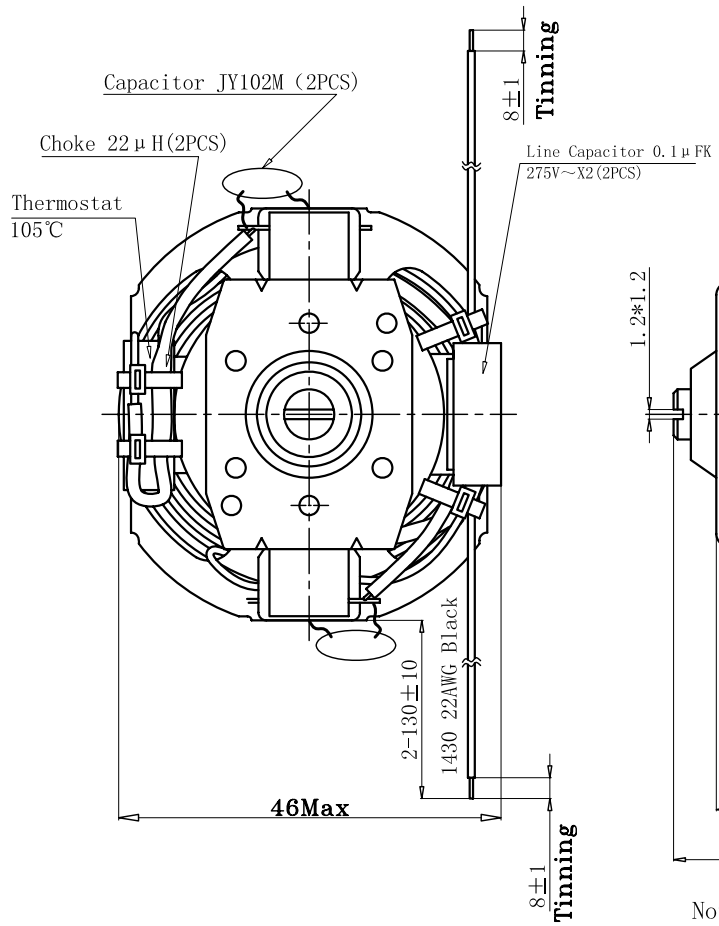

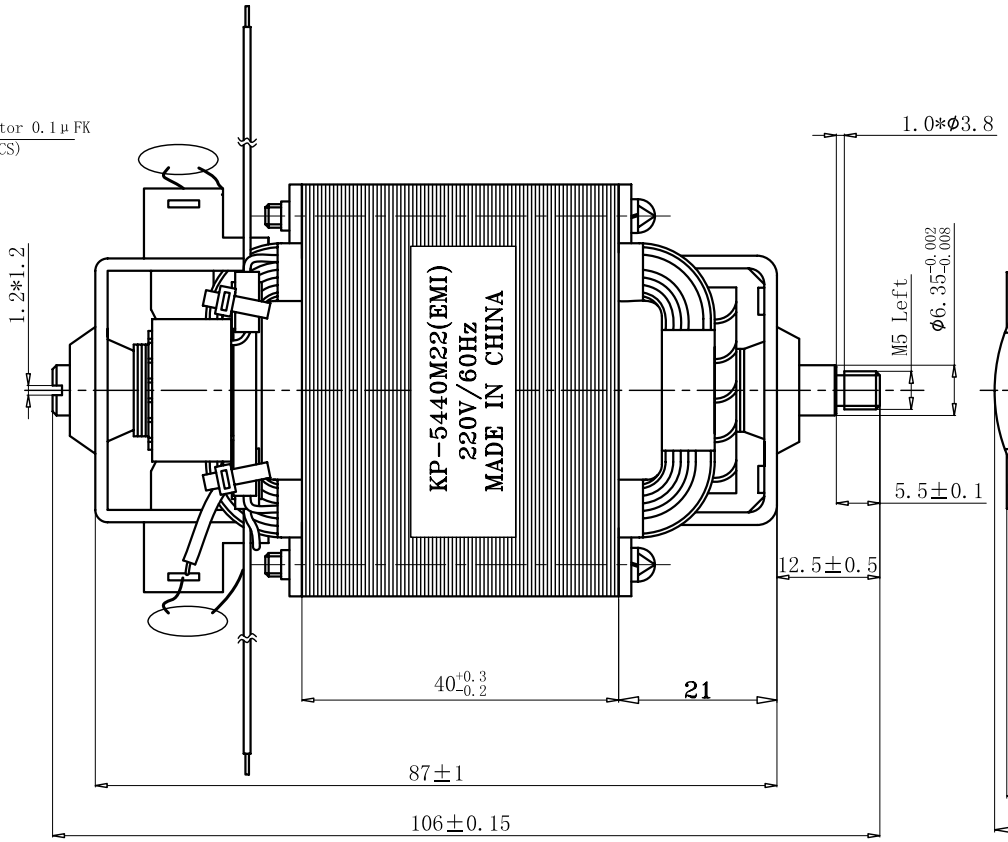

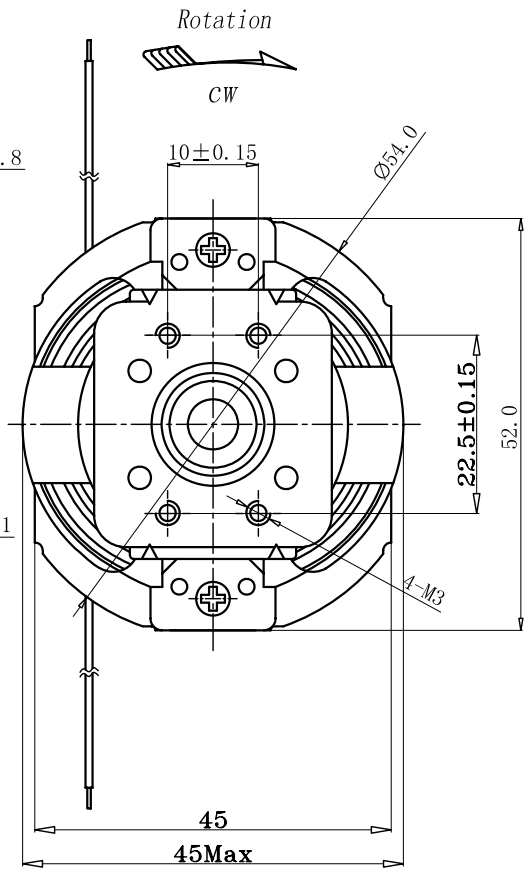

Note:

1. L1=L2=22μH, C1=C2=JEC JY102M, C3=Carli 0.1μFK 275V～X2, Thermostat: 17AMD 105℃;
2. Stamp the date on the stator lamination;
3. Marking as the drawing(stick on the thermostat)。

CIRCUIT DIAGRAM

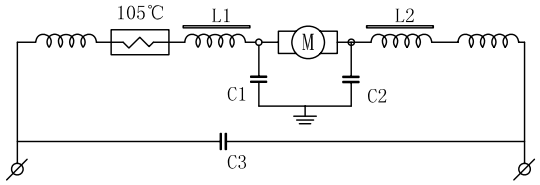

GENERAL TOLERANCES ISO 2768-m

Permissible deviations for linear dimensions

	Permissible deviations for basic size range								
	>0.5 ...3	>3 ...6	>6 ...30	>30 ...120	>120 ...400	>400 ...1000	>1000 ...2000	>2000 ...4000
m	±0.1	±0.1	±0.2	±0.3	±0.5	±0.8	±1.2	±2

Permissible deviations for angular dimensions		Permissible deviations for broken edges (external radii chamfer heights)
	Permissible deviations for ranges of lengths in millimeters of the shorter side of the angle concerned	Permissible deviations for basic size range

	...10	>10 ...50	>50 ...120	>120 ...400	>400	>0.5 ...3	>3 ...6	...6
m	±1°	±0°30'	±0°20'	±0°10'	±0°5'	±0.2	±0.5	±1

DWN. BY YONGXUE DENG	CHK. BY	APP. BY	
Date(yyyymmdd) 2010-12-30	Date(yyyymmdd)	Date(yyyymmdd)	
MATERIAL:		A4	☑ SCALE 3:1
FINISH:			☐ NOT SCALE
General Tolerance ISO 2768-1 Class m (Unless specified)	TITLE		
ALL DIMENSIONS ARE IN MILLIMETRES	KP-5440M22(EMI)		
SHENZHEN ODIN IMPORT AND EXPORT CO.,LTD	DWG NO.	SHEET 1 OF 1	
		A	